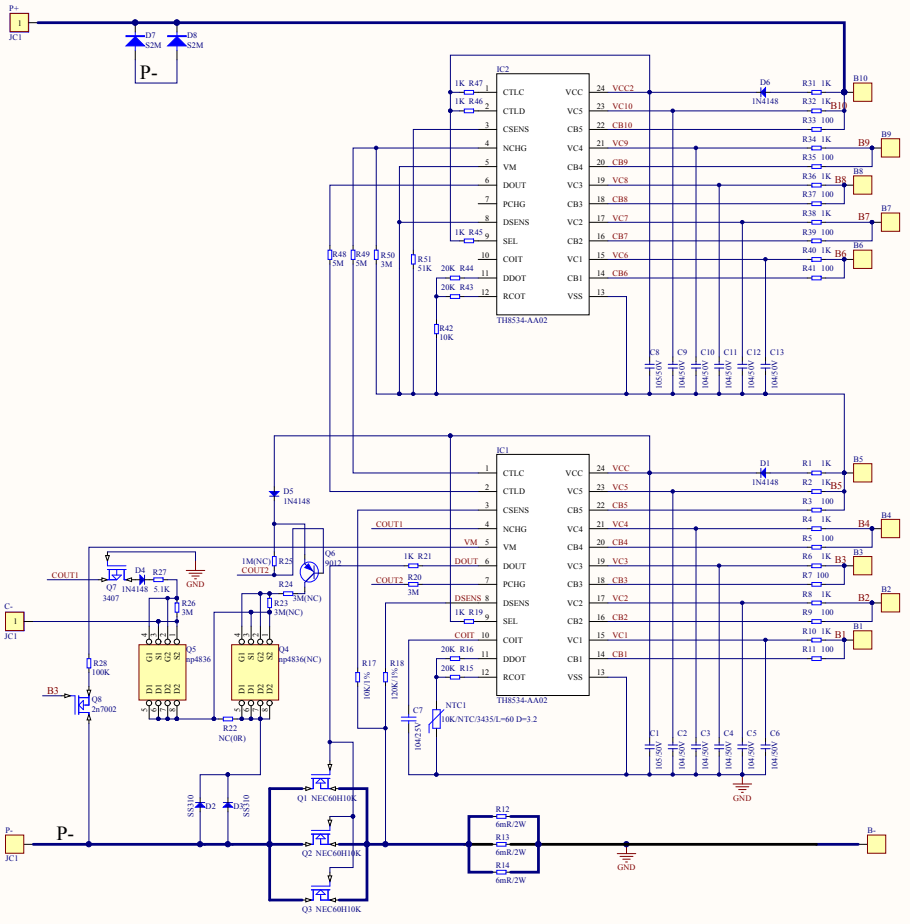

Title		
Size A4	Number	Revision
Date: 2022/11/1		Sheet of
File: E:\Users\ \10C-低模充电带均衡(62841)\[illegible].SchDoc		Drawn By: